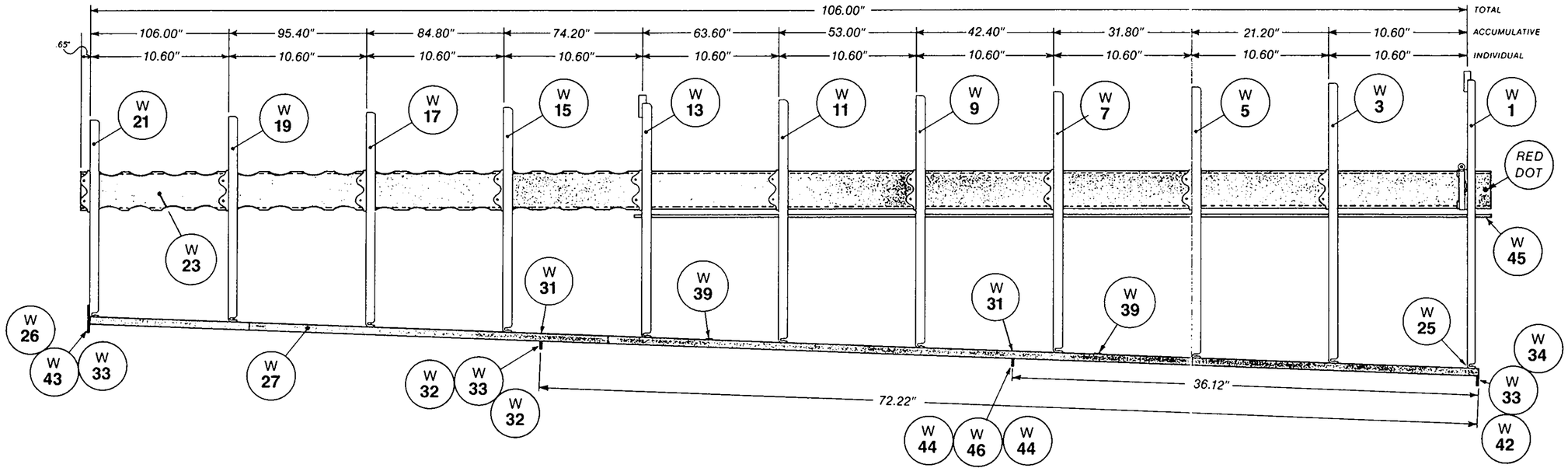

BD-5B

LEFT WING

(RIGHT WING IDENTICAL, BUT OPPOSITE)

NOTE: WING RIBS FOR THE RIGHT WING ARE NUMBERED FROM INBOARD TO OUTBOARD, W2, 4, 6, 8, 10, 12, 14, 16, 18, 20, 22.

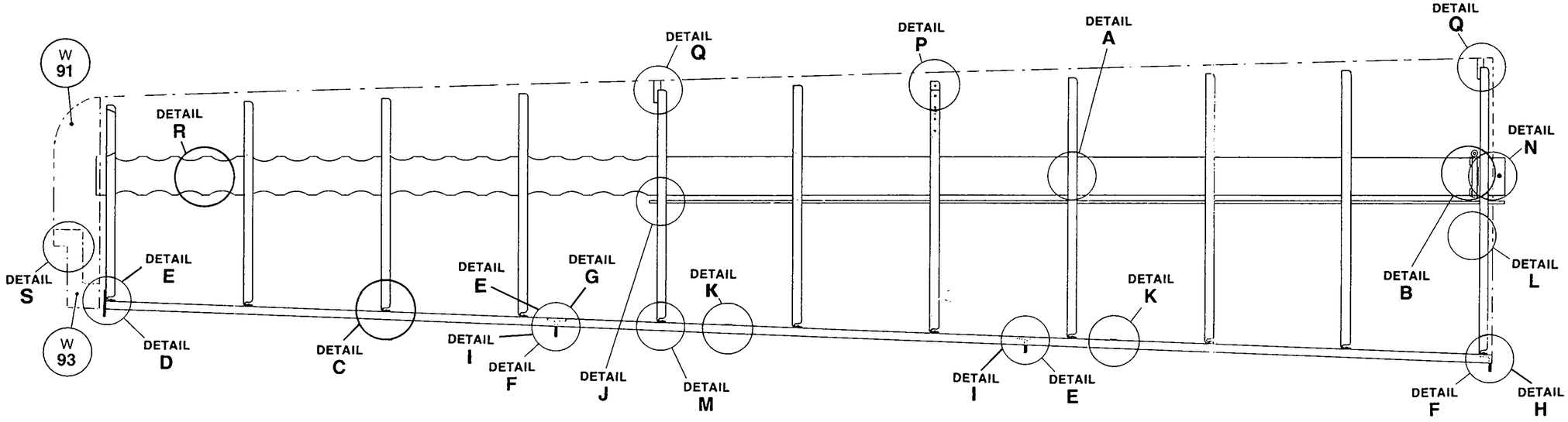

THIS DOCUMENT IS COPYRIGHT
DIGITAL DATA FACTORY © 2003
EDWARD WILLIAMS
LICENSED FROM JAMES BEDE
DO NOT REPRODUCE
EDWARD1469@MAC.COM