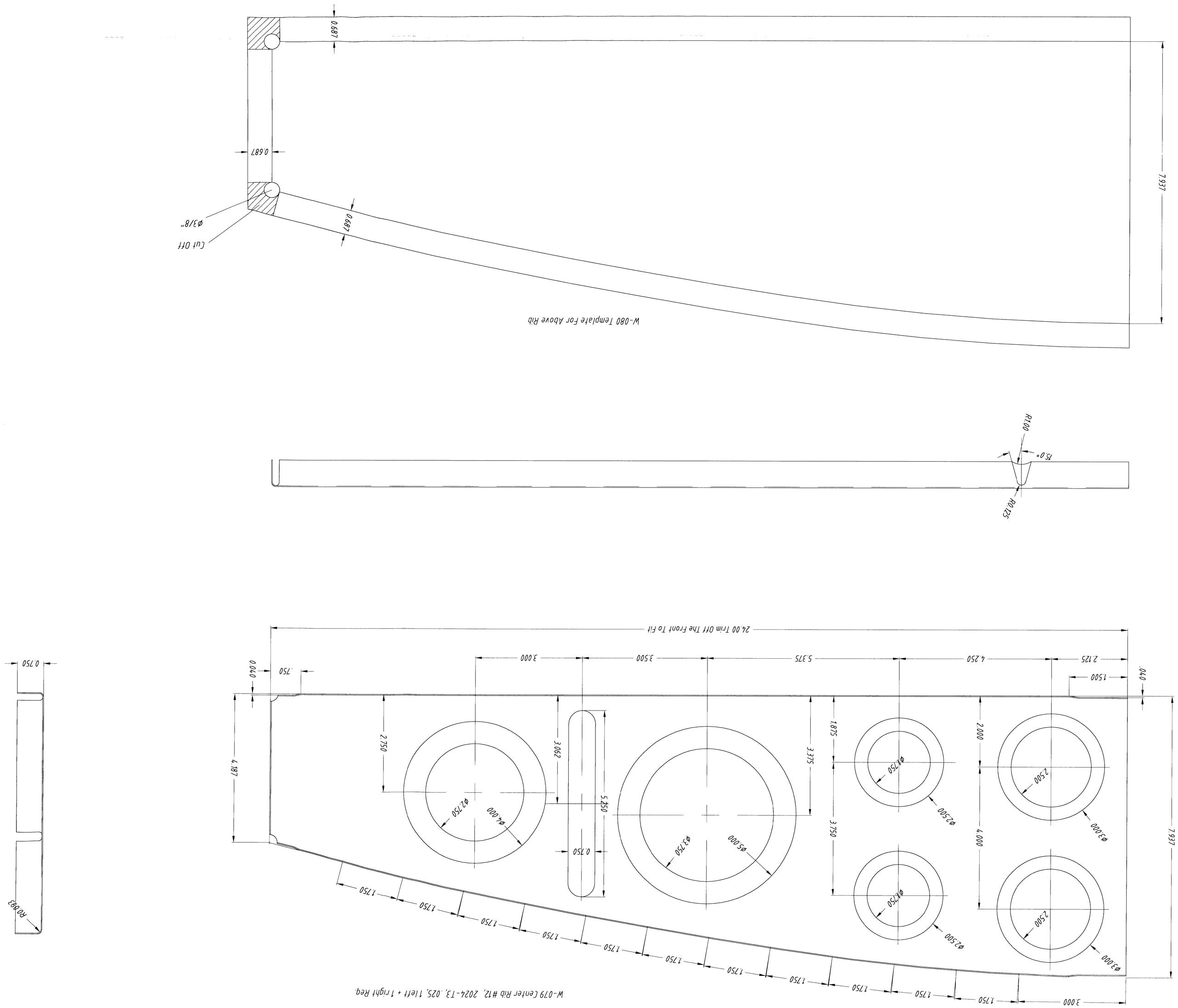
W-080 Template For Above Rib
Cut Off
Ø3/8"
0.687
0.687
0.687
7.937
R0.125
15.0°
R1.00
W-079 Center Rib #12, 2024-T3, .025, 1 left + 1 right Req.
24.00 Trim Off The Front To Fit
3.000
1.750
1.750
1.750